Percussion Play
Outdoor Musical Instruments

Installation Instructions

Ground Fixed

Marimba
Page 1 of 3

Instrument Components:

- x4 M6x20 Security Screw
- x2 M6 Saddle Strap
- x4 M8x60 Security Screw
- x4 M8 Barrel Nut
- x4 M8 Square Nut

MADE IN BRITAIN
BS EN 1176

1.1

1.2

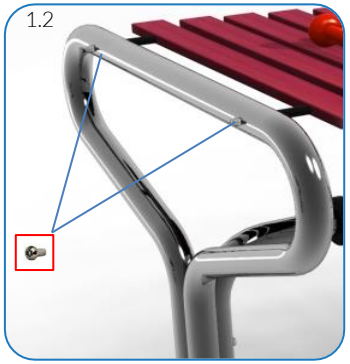

1.3

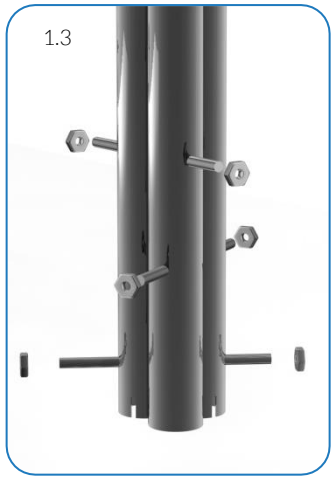

1.4

Weight of heaviest part 15kg (Notes)

Metric Conversion:
250mm/ 10”
300mm/ 12”
400mm/ 16”
650mm/ 26”
750mm/ 30”
1.5m/ 59”

1. Assemble frame and notes as shown in images **1.2, 1.3 and 1.4 (see Assembly Guide)**.

2. **Using M10 nuts and 200mm bolts** supplied locate through pre drilled holes and secure bolts in place to support in ground pole in concrete. **3 Bars per leg** at 120 degree angles. (**1.3**)

3. **Excavate 2 holes** for the Marimba legs **250mm diameter by 300mm deep** in desired location upon decision from customer.

4. Locate (lower) legs into holes making sure they are vertical and level prior to concreting in place.

5. Once happy with location of the Marimba, **fill** holes using rapid hardening **concrete**. Be sure to compact concrete around legs and leave to dry according to manufactures guidelines.

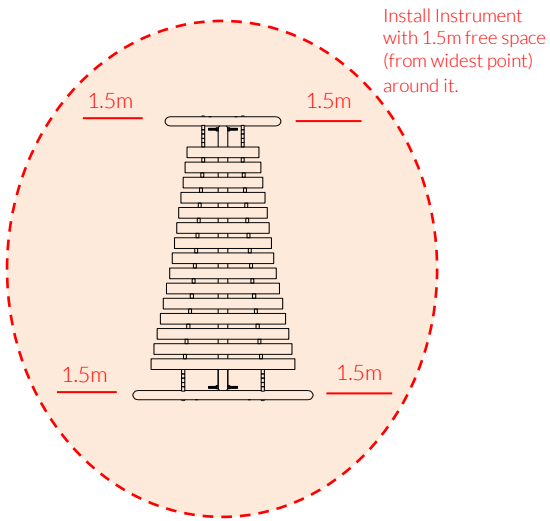

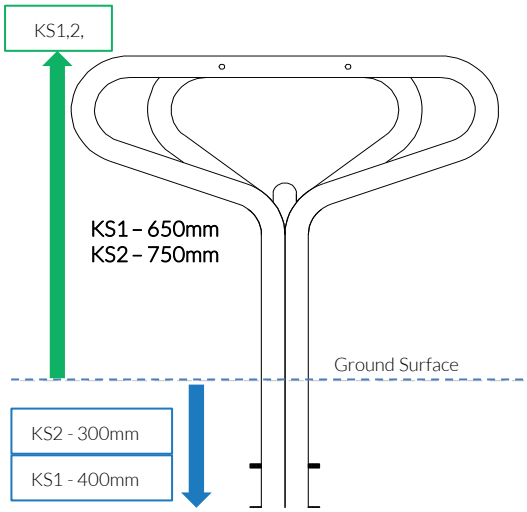

Pair Large Red Beaters X2

Ground Fix Components:

x6 M10x200 Threaded Bar

x12 M10 Nut

Spares available from percussionplay.com or from your local distributor

42 Kg

Assembly Guide PPMARI

Percussion Play
Outdoor Musical Instruments

Ground Fixed

Marimba
Page 2 of 3

Instrument Components:

x4
M6x20 Security Screw

x2
M6 Saddle Strap

x4
M8x60 Security Screw

x4
M8 Barrel Nut

x4
M8 Square Nut

MADE IN BRITAIN
BS EN 1176

Tools:

x1
TX 40 Driver Bit

x1
TX 30 Driver Bit

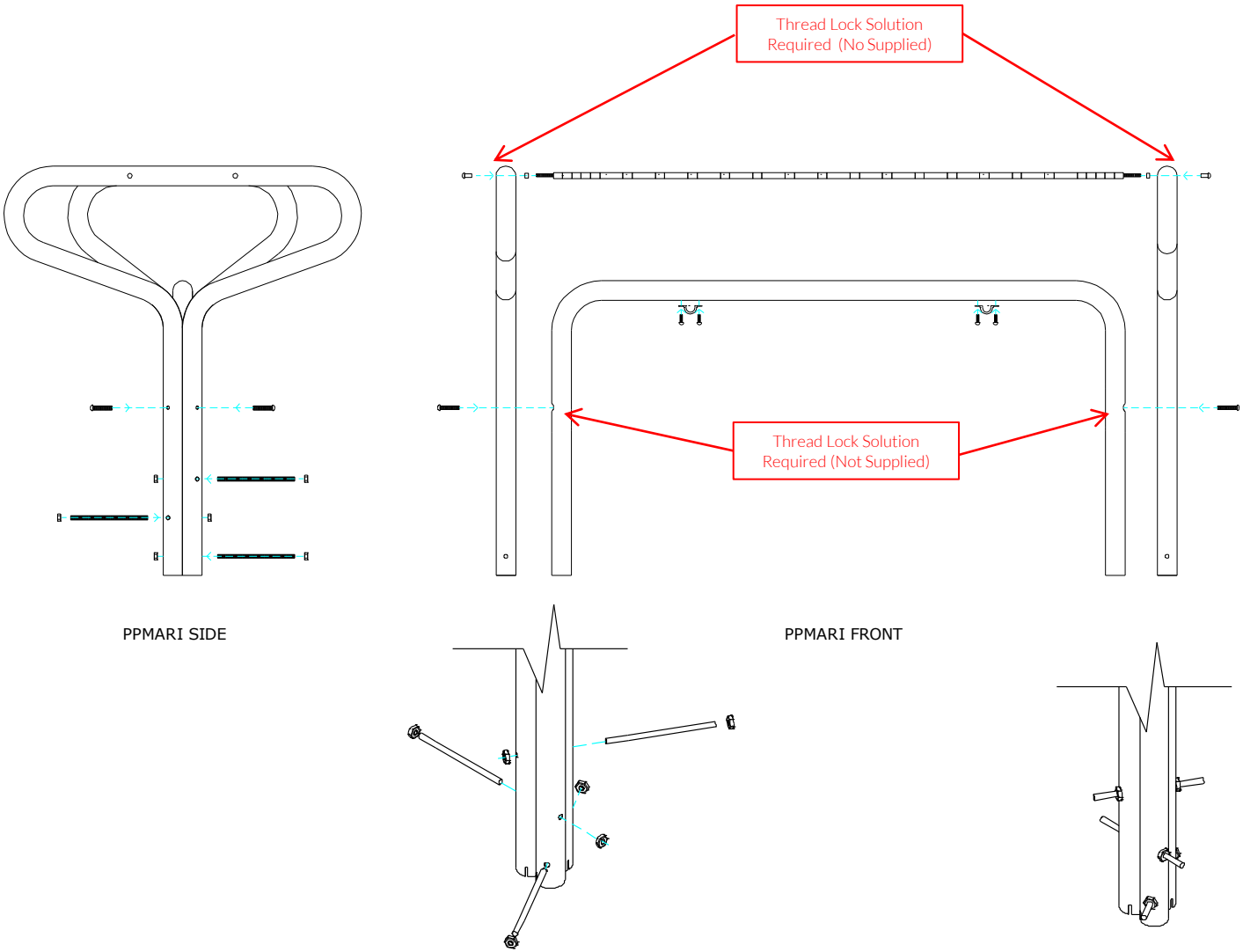

PPMARI SIDE

PPMARI FRONT

COMPONENTS LIST:

- M10 Nut X12
- M10x200 Threaded Bar X6
- M8x60 Pin torx X4
- M8 Barrel Nut Pin torx X4
- M8 Square nut X4
- Saddle Strap X2
- M6x20 Pin torx X4

Pair Large Red Beaters X2

Ground Fix Components:

x6
M10x200 Threaded Bar

x12
M10 Nut

Spares available from percussionplay.com or from your local distributor

42 Kg

Ground Fix Installation

Percussion Play
Outdoor Musical Instruments

Ground Fixed

Marimba
Page 3 of 3

Components:

x6

M10x200 Threaded Bar

x12

M10 Nut

Metric Conversion:
50mm/ 2”
250mm/ 10”
300mm/ 12”
350mm/ 14”

MADE IN BRITAIN

BS EN 1176

1 Excavate 2 holes with a 250mm diameter tapering down to 350mm diameter and 350mm depth

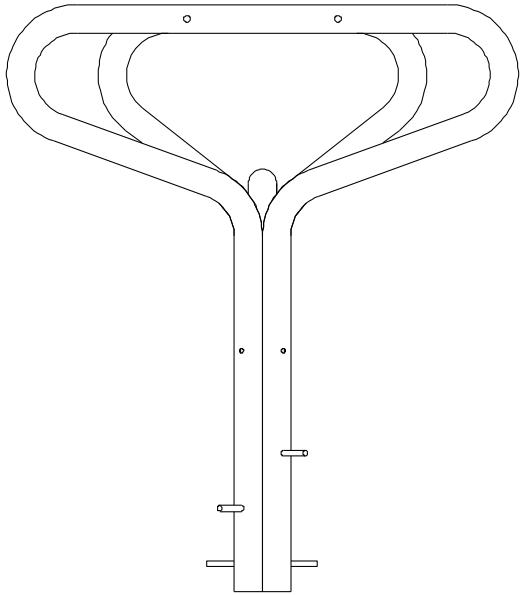

2 Compact base of each hole with 50mm of aggregate. Lower ground the instrument into hole (check instrument straight and level before filling with concrete)

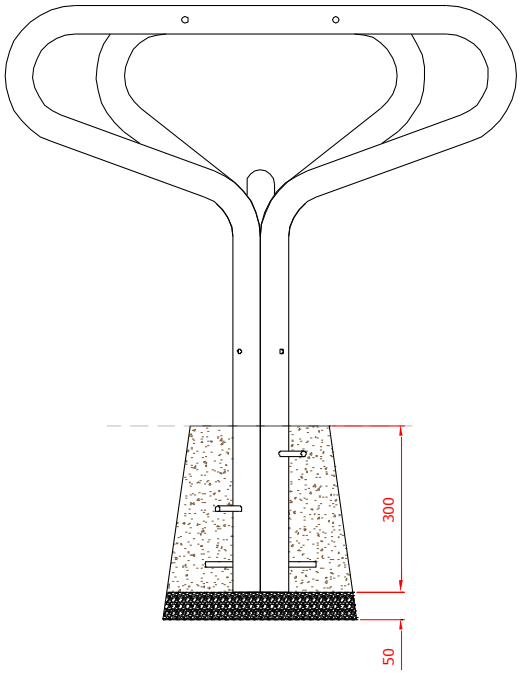

3 Fill hole with fast drying concrete to manufacturers specifications.

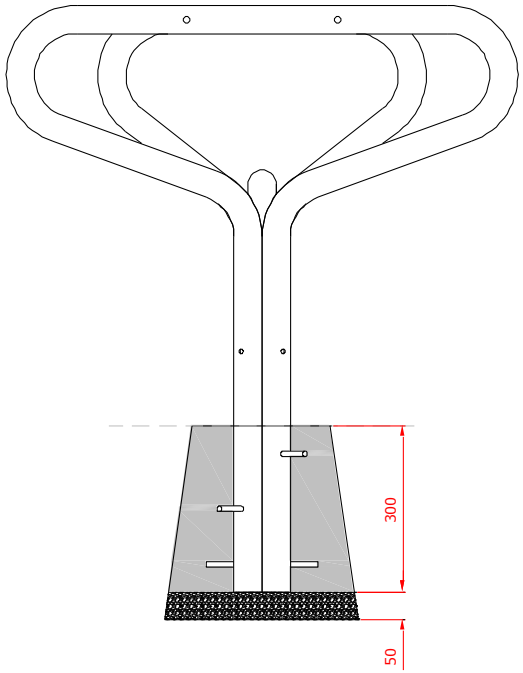

If Marimba needs to be positioned lower a deeper hole can be excavated.

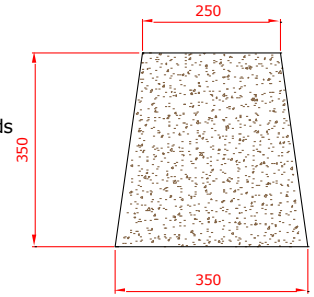

Foundations should not present a hazard. These foundations are recommended as a guide, for more information on foundation details for various surface see Part 1 of BS EN 1176.